POSIT.	CODE	DESCRIPTION	QUANT.	
42	9880005	SPECIAL SCREW M10/10 SEAT ALLEN 5 DYNAMIC	2	
41	9862606	RETURN SPRINGLOCKING HANDLE	1	
40	9862605	RETURN SPRING LOCKING DEVICE	1	
39	9820268	TRILOBITE SCREW M4X12 TC	1	
38	9820075	SNAP RING 5	3	
37	9820073	SNAP-RING 7 DIN 6799-07 BURNISHED	3	
36	9820071	SNAP RING 6 UNI 7434 - DIN 6799	2	
35	9815004	SPRING FOR BECKER BRAKE D11	1	
34	9661605	BACKREST ROTATION PIVOT	1	
33	9661010	FORWARD TILT TIE_ROD	1	
32	9661008	EVERYBODY LOCKING DEVICE	1	
31	9661002	HEXAGONAL BOLT FOR SPRING R.V.	1	
30	9661001	SPRING REGULATION EXAGONALE BOLT	1	
29	9660631	BACK BOLT Ø8 EPRON-SY NYLON SEAT PLATE	1	
28	9063624	RUBBER RING	1	
27	9063606	INTERNAL GAS SPRING ACTIVATING LEVER 1	1	
26	9062612	BUSH Ø8 Ø12	1	
25	9062603	ACTIVATION LINK LOCKING LEVER	1	
24	9061054	EPRON RV FORWARD TILT LOCKING PLATE	1	B
23	9061053	FORWARD TILT LOCKING EPRON RV	1	B
22	9061052	DEFER FORWARD TILT EPRON RV	1	
21	9061051	LOCKING ACTION LEVER EPRON RV WHIT FORWARD TILT	1	
20	9061050	FORWARD TILT HANDLE EPRON RV	1	
19	9061038	BACKWARD SHOCK ABSORBER EPRON RV	1	
18	9061036	COVER HANDLE EPRON 2 R.V.	2	
17	9061035	GEAR SPRING REGULATION EPRONRV	1	
16	9061034	BACKREST SUPPORT COVER EPRON 2 RV	1	
15	9061033	GAS ACTION LEVER EPRON 2 RV	1	
14	9061032	EPRON RV TENSION KNOB	1	
13	9061030	LIFT ACTION LEVER	1	
12	9061009	TENSION ADJUSTMENT CAM	1	
11	9061008	GEAR SPRING REGULATION EPRON RV	1	
10	9061004	TENSION ADJUSTMENT CAM	1	
9	9060612	EPRON SY BACKREST BUSHING	2	
8	9020209	CAPS	1	
7	9000005	BEARING d.10	2	
6	9000001	OSCILLATION STOP BUMPER	2	
5	5461003	EPRON RV HOUSING WHITH FORWARD TILT MACHINED / PAINTED	1	
4	4660735	SEAT PLATE EPRON RV	1	C
3	3061001	FORWARD TILT BEAM EPRON RV	1	
2	2561003	EPRON RV FORWARD TILT BACKREST SUBASSEMBLY	1	
1	2561000	PRE-ASSEMBLED GROUP EPRON RV FORWARD TILT SPRING REGULATION	1	

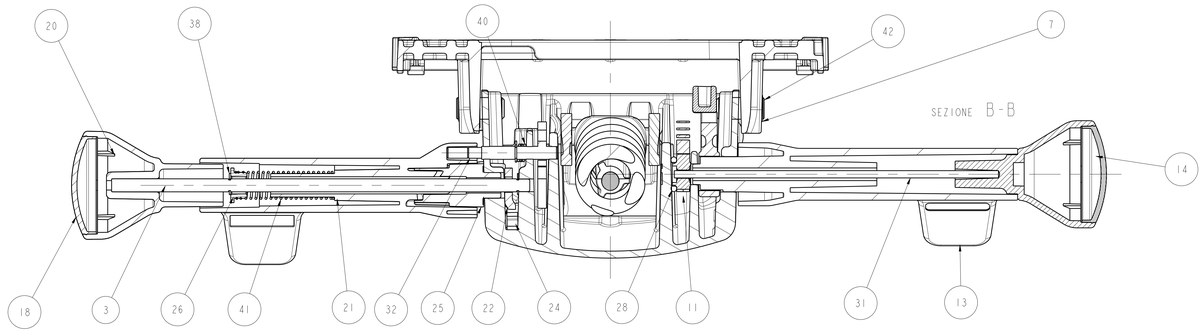

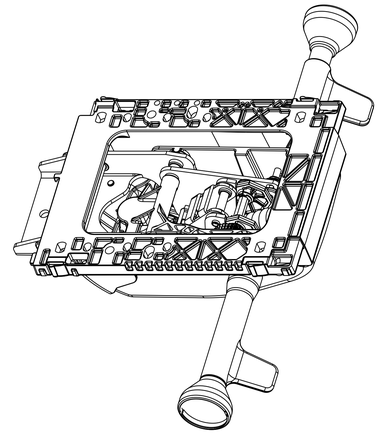

SCALA 1:2

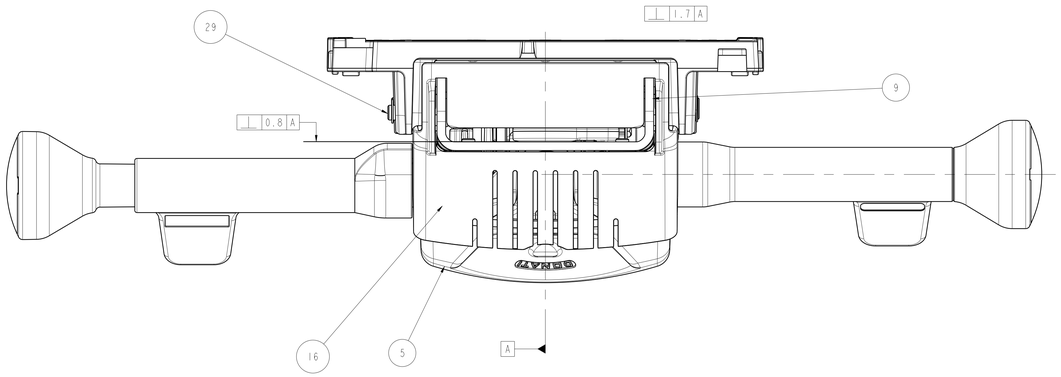

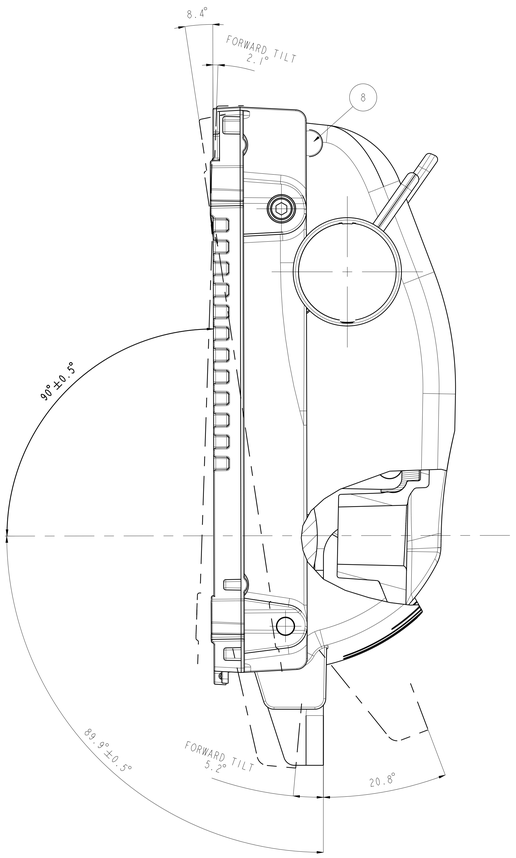

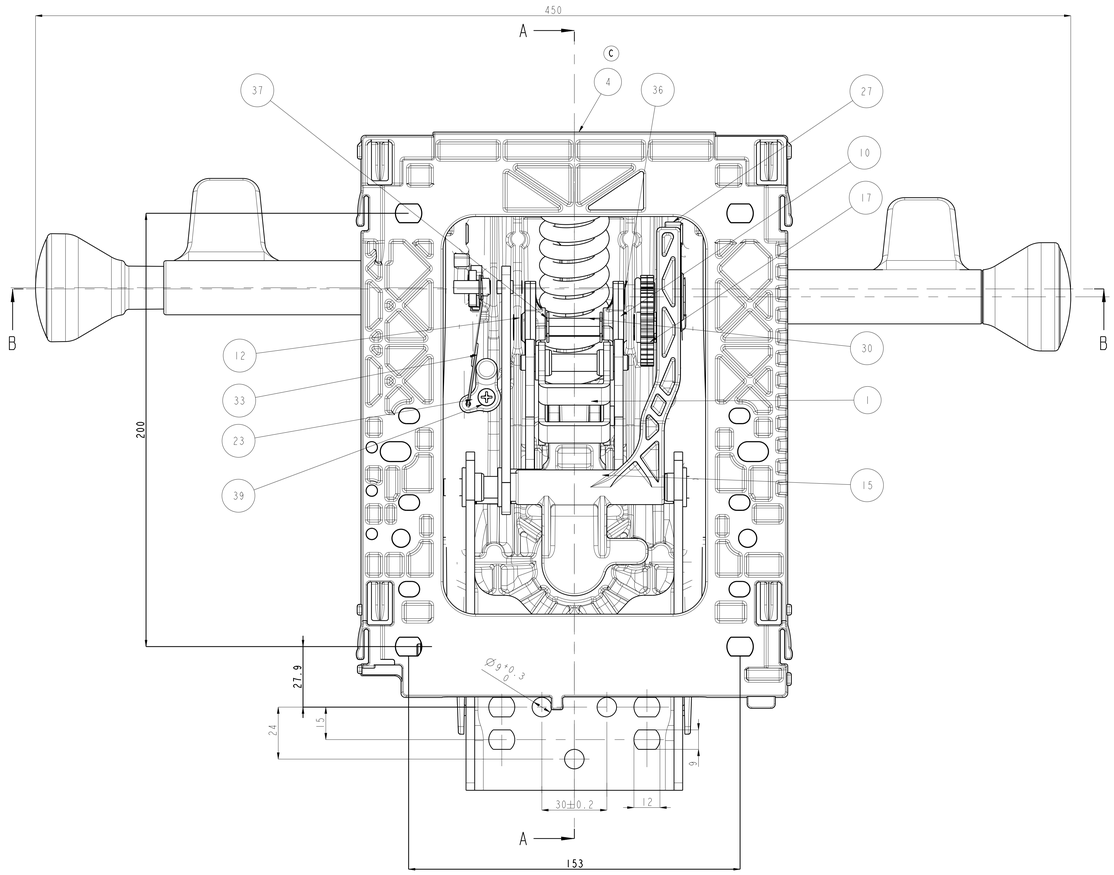

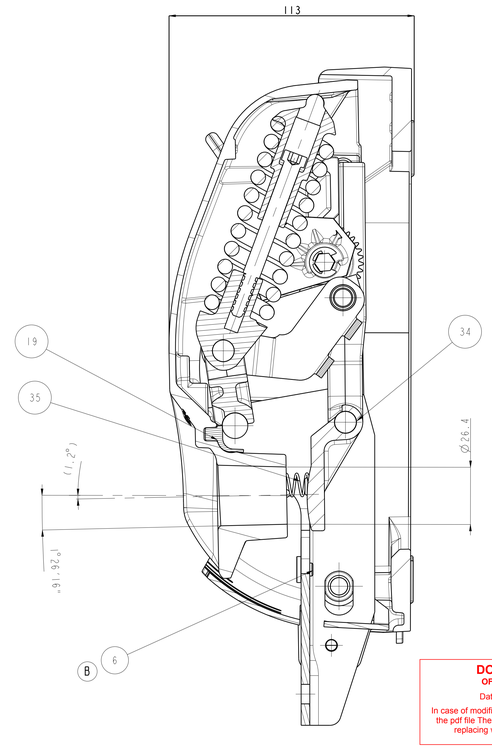

SEZIONE A-A

DONATI SPA
OFFICIAL COPY
Date ..... 07/10/2016 .....
In case of modifications Donati s.p.a. update the pdf file The recipient is responsible for replacing with the modified copy

MODIFICATION DESCRIPTION	EXP.	DATE	ENGINEER
PARADITA RIMOSSI E PIASTRA SOSTITUITA	C	06.10.16	WAGNER
AGGIUNTE N°2 COPERTURE LATERALI (DX E SX) ANTISCHIACCIAMENTO E PARACOLPI	B	02.08.16	GUAGLIETTA
	A	22.01.16	ACCASCINA

SCALE 1:1	CONTROL	SURFACE-PROTEZIONE / COLOR	MATERIAL
		HEAT TREATING-TRATTAMENTO TERMICO	CLIENT DRAWING/EXP - DIS.CLIENTE/ESP.
DONATI	DESCRIPTION / DESCRIZIONE	MECH. EPRON WITH FORWARD TILT SEAT / MECC. EPRON RV CON VARIAT. ASSETTO SEDIELE/SCHIENALE	
	FORMAT A0	GENERAL TOLERANCE ISO 2768 - m	DRAWING NR / DISEGNO NR 1061200

The drawing is the exclusive property of Donati S.P.A. who protect their rights in accordance with the law. The object shown cannot be copied and the drawing cannot be reproduced without written consent from Donati S.P.A